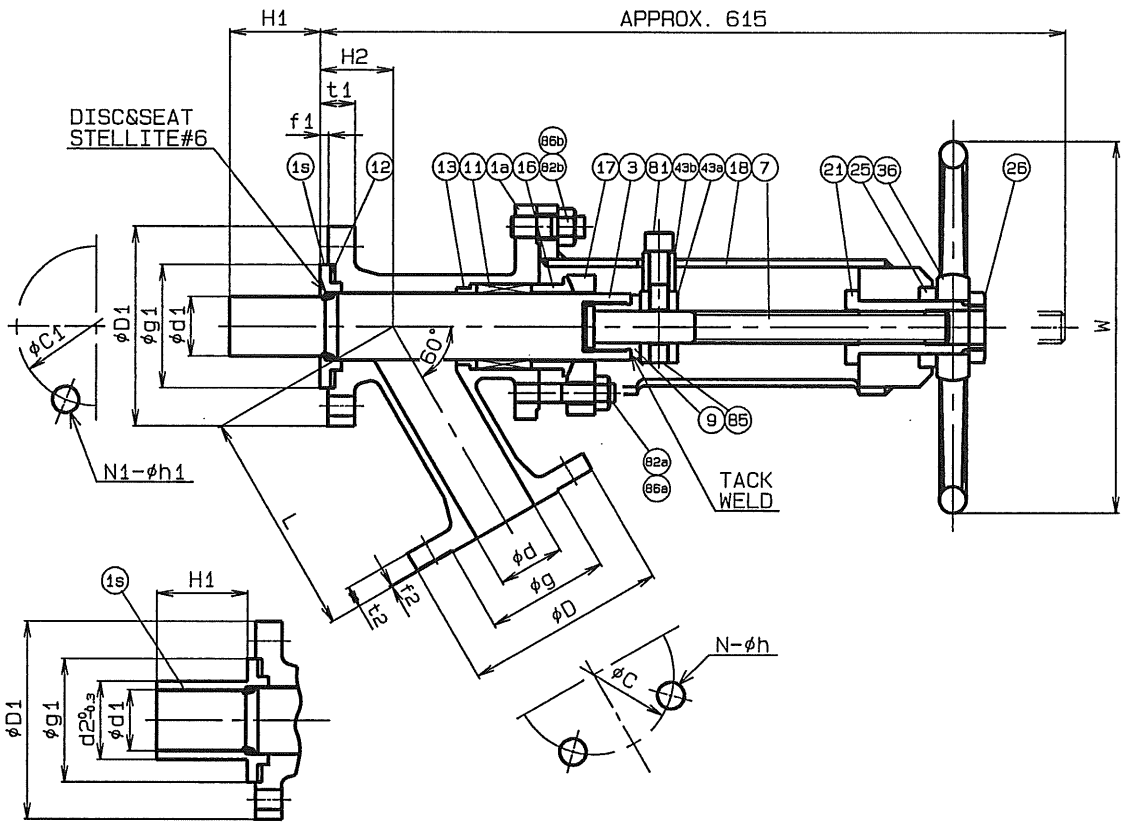

The drawing is intellectual possesion of Aska Corporation. Copying, duplicating, reprinting or distributing in whole or in part of the drawing data is prohibited unelss prior permisson obtained from Aska Corporation.

REV.				
86b	NUT	S45C	4	
86a	NUT	SUS304	2	
85	SET SCREW	SCM435	1	
82b	STUD BOLT	SNB7	4	
82a	GLAND BOLT	SUS304	2	
81	SOCKET BOLT	SCM435	1	
43b	COLLAR	SUS304	1	
43a	BOSS	SS400	1	
36	HAND WHEEL	FC200	1	
26	LOCK NUT	SS400	1	
25	WASHER	C3771	1	
21	SLEEVE	C3771	1	
18	YOKE	SS400	1	
17	GLAND PLATE	SS400	1	
16	GLAND	SUS304	1	
13	STEM GUIDE	SUS304	1	
12	GASKET	PTFE G20	1	
11	PACKING	T/#9034+ PTFE G20	1	
9	SWIVEL NUT	SUS304	1	
7	STEM	SUS304	1	
3	PISTON	SUS304	1	
1s	SEAT	SUS304	1	
1a	BODY	SCS13	1	
No	NAME	MATERIAL	QTY	REMARKS

HARD FACING OF SURFACE	DISC SEAT	STELLITE #6
	BODY SEAT	STELLITE #6

HYDROSTATIC TEST			
			MPa
			(G)
	SEAT	0.3	
	BODY	0.4	

"d2"&"H1" are standard dimension and available to cutomize on request.

SIZE		INLET										OUTLET														
IN	OUT	d1	d2	H1	D1	C1	N1	h1	t1	f1	g1	d	D	C	N	h	t2	f2	g	H2	H	L		W	Q'ty	REMARKS
20A	20A	21	–	25	100	75	4	15	26	5	56	20	100	75	4	15	14	1	81	40	615	135		160		
25A	25A	25	33	25	125	90	4	19	26	5	67	25	125	90	4	19	14	1	67	42	650	140		160		
40A	40A	38	49	30	140	105	4	19	28	5	81	38	140	105	4	19	16	2	81	51	660	165		180		
50A	50A	44	58	35	155	120	4	19	28	5	96	50	155	120	4	19	16	2	96	60	840	200		250		
65A	65A	55	67	35	175	140	4	19	30	5	116	65	175	140	4	19	18	2	116	75	900	240		280		
80A	80A	70	90	35	185	150	8	19	30	5	126	76	185	150	8	19	18	2	126	80	920	250		355		
100A	100A	95	105	40	210	175	8	19	30	5	151	100	210	175	8	19	18	2	151	119	1170	300		400		

Specification & Dimension are subject to modify by Aska without notice.
Please contact us for updated information.

DATE 09/05/13
CHIEF
CH.
DWN. A.K
SCALE ~
3rd ANGLE PROJECTION

SCS13
JIS 10K-FLANGED
PISTON VALVE

DWG.No R-P-0164

ASKA CORPORATION

ASKA 458-1 Minosho-cho, Yamato Koriyama-city, 639-1103 Nara Japan TEL : +81-742-24-3100 FAX : +81-742-24-3107 E-mail : info@bb-aska.co.jp Web : www.bb-aska.co.jp