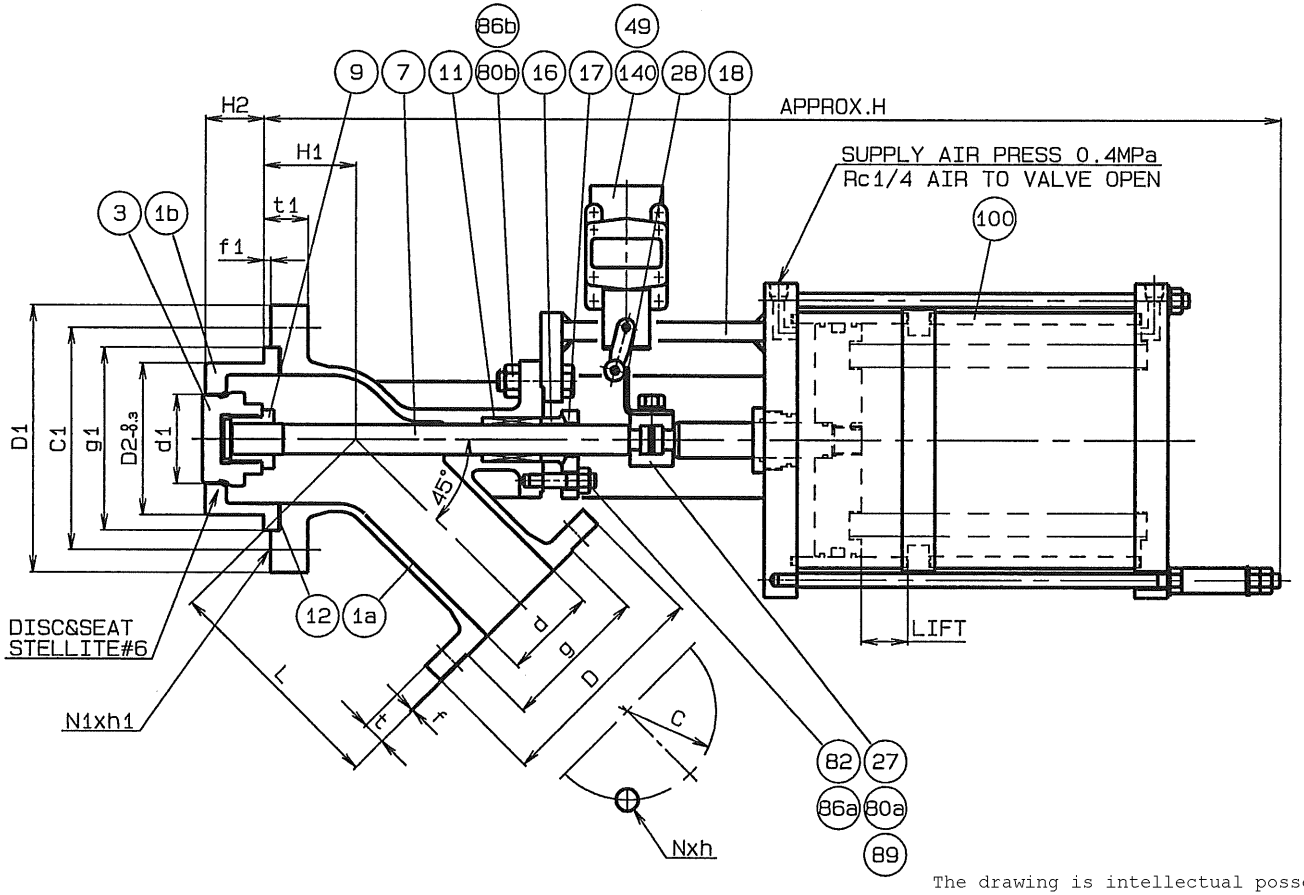


| REV. | | | | |
|---|---|---|---|---|
| | | | | |
| | | | | |
| | | | | |
| | | | | |
| | | | | |
| | | | | |
| | | | | |
| | | | | |
| | | | | |
| | | | | |
| | | | | |
| 140 | LIMIT SWITCH | 1LX-5001 | 1 | |
| 100 | CYLINDER | STKM13A+SS400 | 1 | |
| | | | | |
| 89 | S.WASHER | SWRH57 | 2 | |
| 86b | HE'X NUT | S45C | 4 | |
| 86a | HE'X NUT | SUS304 | 2 | |
| 82 | GLAND BOLT | SUS304 | 2 | |
| 80b | HE'X BOLT | SCM435H | 4 | |
| 80a | HE'X BOLT | SCM435H | 2 | |
| 49 | BRACKET | SS400 | 1 | |
| | | | | |
| 28 | INDICATOR | SS400 | 1 | |
| 27 | STEM LOCK | SS400 | 1 | |
| 18 | YOKE | SS400 | 1 | |
| 17 | GLAND PLATE | SUS304 | 1 | |
| 16 | GLAND | SUS304 | 1 | |
| 12 | GASKET | PTFE-G20 | 1 | |
| 11 | PACKING | T/#9034+PTFE-G20 | 1 | |
| 9 | SWIVEL NUT | SUS304 | 1 | |
| 7 | STEM | SUS304 | 1 | |
| 3 | DISC | SUS304 | 1 | |
| 1b | SEAT | SUS304 | 1 | |
| 1a | BODY | SCS13 | 1 | |
| No | NAME | MATERIAL | QTY | REMARKS |

Specification & Dimension are subject to modify by Aska without notice.
Please contact us for updated information.

The drawing is intellectual possession of Aska Corporation.
Copying, duplicating, reprinting or distributing in whole or in part of the drawing data is prohibited unless prior permission obtained from Aska Corporation.

"D2"&"H2" are standard dimension and available to customize on request.

| SIZE (A) | | OUTLET JIS 10K-RF FLANGE | | | | | | | | INLET JIS 10K-RF FLANGE | | | | | | | | | L | LIFT | H | H1 | H2 | | | | Rc | | Q'TY | TAG No |
|---|---|---|---|---|---|---|---|---|---|---|---|---|---|---|---|---|---|---|---|---|---|---|---|---|---|---|---|---|---|---|
| OUT | IN | d | D | C | N | h | t | f | g | d1 | D1 | C1 | N1 | h1 | t1 | f1 | g1 | D2 | | | | | | | | | | | | |
| | | | | | | | | | | | | | | | | | | | | | | | | | | | | | | |
| 20 | 25 | 20 | 100 | 75 | 4 | 15 | 14 | 1 | 56 | 20 | 125 | 90 | 4 | 19 | 26 | 6 | 67 | 46 | 120 | 25 | 680 | 42 | 25 | | | | 1/4 | | | |
| 25 | 40 | 25 | 125 | 90 | 4 | 19 | 14 | 1 | 67 | 25 | 140 | 105 | 4 | 19 | 28 | 6 | 81 | 52 | 140 | 25 | 680 | 48 | 25 | | | | 1/4 | | | |
| 40 | 50 | 40 | 140 | 105 | 4 | 19 | 16 | 2 | 81 | 40 | 155 | 120 | 4 | 19 | 28 | 6 | 96 | 72 | 155 | 30 | 710 | 50 | 30 | | | | 1/4 | | | |
| 50 | 80 | 50 | 155 | 120 | 4 | 19 | 16 | 2 | 96 | 50 | 185 | 150 | 8 | 19 | 30 | 6 | 126 | 106 | 170 | 35 | 750 | 67 | 35 | | | | 1/4 | | | |
| 80 | 100 | 80 | 185 | 150 | 8 | 19 | 18 | 2 | 126 | 76 | 210 | 175 | 8 | 19 | 30 | 6 | 151 | 130 | 200 | 40 | 840 | 71 | 40 | | | | 1/4 | | | |
| 100 | 150 | 100 | 210 | 175 | 8 | 19 | 18 | 2 | 151 | 100 | 280 | 240 | 8 | 23 | 38 | 6 | 212 | 189 | 240 | 45 | 930 | 98 | 50 | | | | 1/4 | | | |
| 125 | 200 | 125 | 250 | 210 | 8 | 23 | 20 | 2 | 182 | 100 | 330 | 290 | 12 | 23 | 34 | 6 | 262 | 189 | 300 | 45 | 930 | 92 | 50 | | | | 1/4 | | | |
| 150 | 200 | 150 | 280 | 240 | 8 | 23 | 22 | 2 | 212 | 140 | 330 | 290 | 12 | 23 | 34 | 6 | 262 | 225 | 300 | 60 | 1150 | 94 | 50 | | | | 1/4 | | | |

| | | | |
|---|---|---|---|
| HARD FACING OF SURFACE | DISC SEAT | STELLITE #6 | |
| | BODY SEAT | STELLITE #6 | |
| HYDROSTATIC TEST | | | MPa (G) |
| | CYLINDER | AIR 1.0 | |
| | SEAT | 0.6 | |
| | BODY | 1.0 | |

| | | |
|---|---|---|
| DATE 09.05.12 | SCS13 JIS 10K RF CYLINDER OPERATED FC-TYPE TANK VALVE (AIR TO OPEN) | |
| CHIEF | | |
| CH. | | |
| DWN. A.K | | |
| SCALE | | |
| 3rd ANGLE PROJECTION | DWG.No | R-TI-0074 |

ASKA CORPORATION

ASKA 458-1 Minosho-cho, Yamato Koriyama-city, 639-1103 Nara Japan TEL : +81-742-24-3100 FAX : +81-742-24-3107 E-mail : info@bb-aska.co.jp Web : www.bb-aska.co.jp

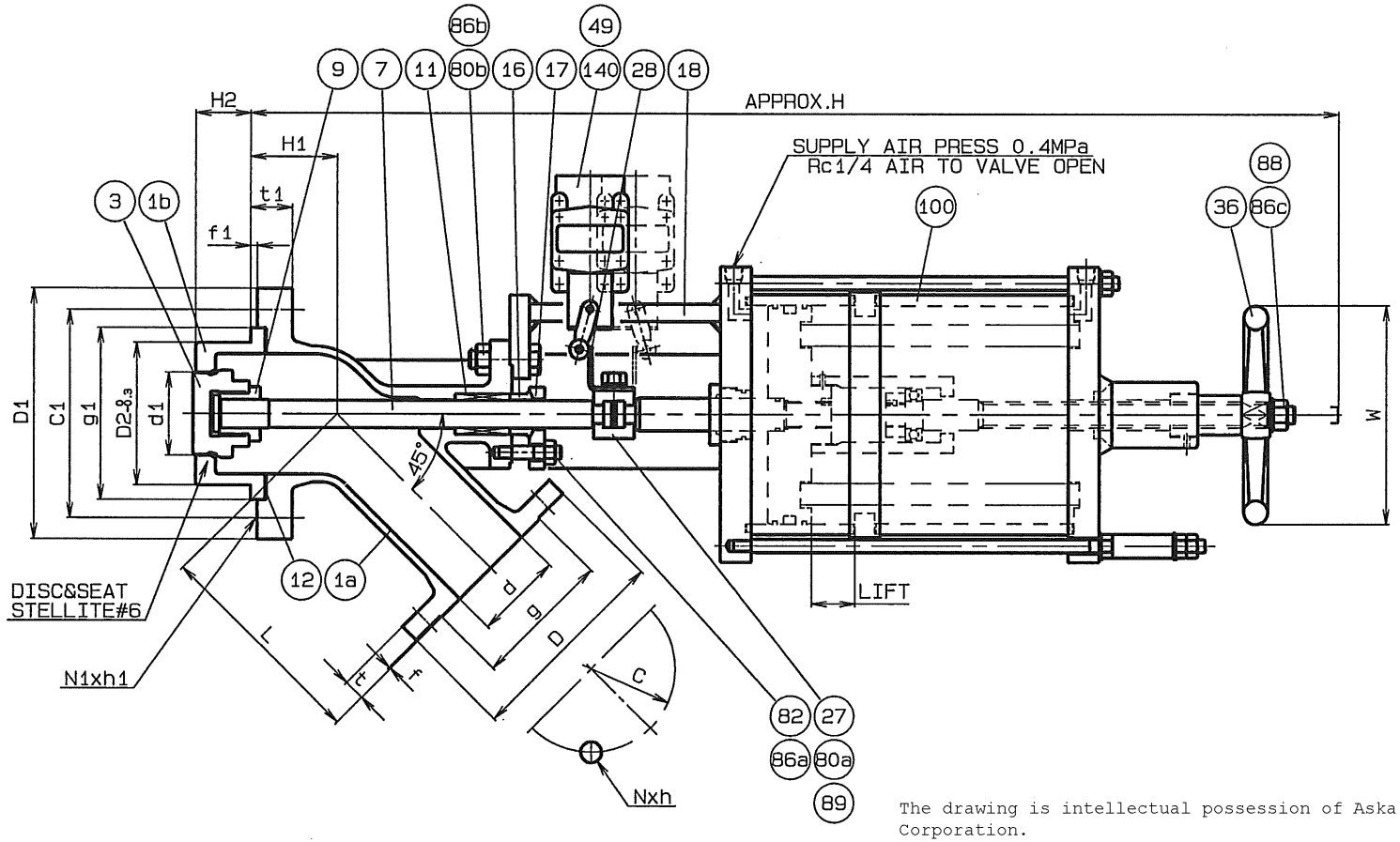


| No | NAME | MATERIAL | QTY | REMARKS |
|---|---|---|---|---|
| 140 | LIMIT SWITCH | 1LX-5001 | 2 | |
| 100 | CYLINDER | STKM13A+SS400 | 1 | |
| 89 | S.WASHER | SWRH57 | 2 | |
| 88 | WASHER | SS400 | 1 | |
| 86c | HE'X NUT | SS400 | 1 | |
| 86b | HE'X NUT | S45C | 4 | |
| 86a | HE'X NUT | SUS304 | 2 | |
| 82 | GLAND BOLT | SUS304 | 2 | |
| 80b | HE'X BOLT | SCM435H | 4 | |
| 80a | HE'X BOLT | SCM435H | 2 | |
| 49 | BRACKET | SS400 | 1 | |
| 36 | HAND WHELL | FC200 | 1 | |
| 28 | INDICATOR | SS400 | 1 | |
| 27 | STEM LOCK | SS400 | 1 | |
| 18 | YOKE | SS400 | 1 | |
| 17 | GLAND PLATE | SUS304 | 1 | |
| 16 | GLAND | SUS304 | 1 | |
| 12 | GASKET | PTFE-G20 | 1 | |
| 11 | PACKING | T/#9034+PTFE-G20 | 1 | |
| 9 | SWIVEL NUT | SUS304 | 1 | |
| 7 | STEM | SUS304 | 1 | |
| 3 | DISC | SUS304 | 1 | |
| 1b | SEAT | SUS304 | 1 | |
| 1a | BODY | SCS13 | 1 | |

REV.

The drawing is intellectual possession of Aska Corporation.
Copying, duplicating, reprinting or distributing in whole or in part of the drawing data is prohibited unless prior permission obtained from Aska Corporation.

Specification & Dimension are subject to modify by Aska without notice.
Please contact us for updated information.

"D2"&"H2" are standard dimension and available to customize on request.

| SIZE (A) | | OUTLET JIS 10K-RF FLANGE | | | | | | | | INLET JIS 10K-RF FLANGE | | | | | | | | | L | LIFT | H | H1 | H2 | | | W | Rc | | Q'TY | TAG No |
|---|---|---|---|---|---|---|---|---|---|---|---|---|---|---|---|---|---|---|---|---|---|---|---|---|---|---|---|---|---|---|
| OUT | IN | d | D | C | N | h | t | f | g | d1 | D1 | C1 | N1 | h1 | t1 | f1 | g1 | D2 | | | | | | | | | | | | |
| 20 | 25 | 20 | 100 | 75 | 4 | 15 | 14 | 1 | 56 | 20 | 125 | 90 | 4 | 19 | 26 | 6 | 67 | 46 | 120 | 25 | 750 | 42 | 25 | | | 160 | 1/4 | | | |
| 25 | 40 | 25 | 125 | 90 | 4 | 19 | 14 | 1 | 67 | 25 | 140 | 105 | 4 | 19 | 28 | 6 | 81 | 52 | 140 | 25 | 750 | 48 | 25 | | | 160 | 1/4 | | | |
| 40 | 50 | 40 | 140 | 105 | 4 | 19 | 16 | 2 | 81 | 40 | 155 | 120 | 4 | 19 | 28 | 6 | 96 | 72 | 155 | 30 | 810 | 50 | 30 | | | 160 | 1/4 | | | |
| 50 | 80 | 50 | 155 | 120 | 4 | 19 | 16 | 2 | 96 | 50 | 185 | 150 | 8 | 19 | 30 | 6 | 126 | 106 | 170 | 35 | 860 | 67 | 35 | | | 180 | 1/4 | | | |
| 80 | 100 | 80 | 185 | 150 | 8 | 19 | 18 | 2 | 126 | 76 | 210 | 175 | 8 | 19 | 30 | 6 | 151 | 130 | 200 | 40 | 960 | 71 | 40 | | | 200 | 1/4 | | | |
| 100 | 150 | 100 | 210 | 175 | 8 | 19 | 18 | 2 | 151 | 100 | 280 | 240 | 8 | 23 | 38 | 6 | 212 | 189 | 240 | 45 | 1030 | 98 | 50 | | | 250 | 1/4 | | | |
| 125 | 200 | 125 | 250 | 210 | 8 | 23 | 20 | 2 | 182 | 100 | 330 | 290 | 12 | 23 | 34 | 6 | 262 | 189 | 300 | 45 | 1030 | 92 | 50 | | | 250 | 1/4 | | | |
| 150 | 200 | 150 | 280 | 240 | 8 | 23 | 22 | 2 | 212 | 140 | 330 | 290 | 12 | 23 | 34 | 6 | 262 | 225 | 300 | 60 | 1250 | 94 | 50 | | | 315 | 1/4 | | | |

| | | |
|---|---|---|
| HARD FACING OF SURFACE | DISC SEAT | STELLITE #6 |
| | BODY SEAT | STELLITE #6 |
| HYDROSTATIC TEST | CYLINDER | AIR 1.0 MPa (G) |
| | SEAT | 0.6 |
| | BODY | 1.0 |

DATE 09.05.12
CHIEF
CH.
DWN. A.K
SCALE
3rd ANGLE PROJECTION

SCS13
JIS 10K RF
CYLINDER OPERATED
FC-TYPE TANK VALVE
(AIR TO OPEN)

DWG.No R-TI-0073

ASKA CORPORATION

ASKA 458-1 Minosho-cho, Yamato Koriyama-city, 639-1103 Nara Japan TEL : +81-742-24-3100 FAX : +81-742-24-3107 E-mail : info@bb-aska.co.jp Web : www.bb-aska.co.jp